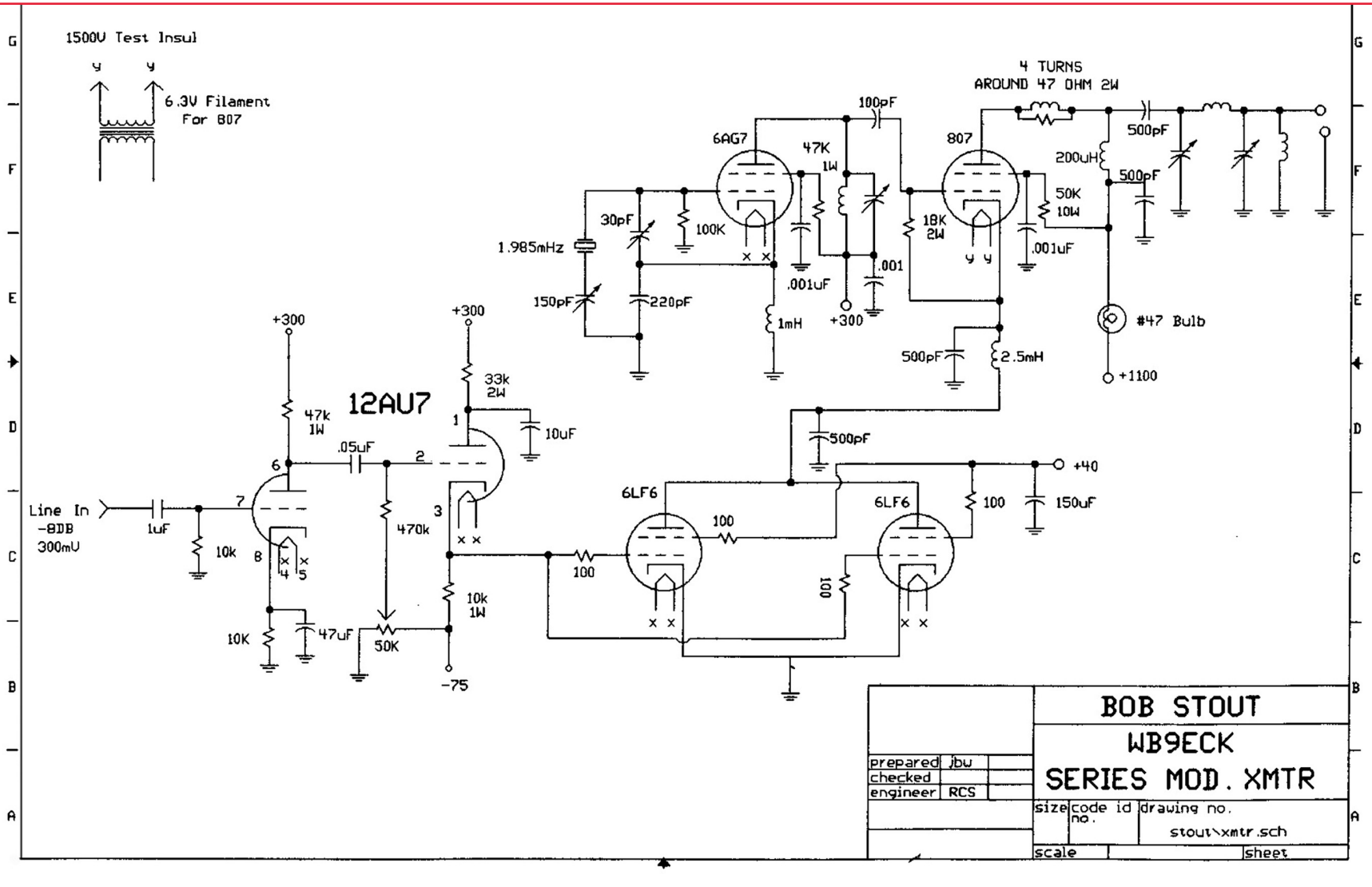Now you can have a nice small 25 watt transmitter/exciter requiring only four tubes and NO modulation transformer. Hi-fi and no iron required. What's not to like?!? The transmitter output is adjustable from zero to twenty five watts output with 100% modulation. If you run about 15 watts the positive peaks will be somewhere around 115% while the negative peaks remain below
100%. Works great for driving a grounded grid linear.